The Successful Application of Pneumatic Flotation Technology for the Removal of Silica by Reverse Flotation at the Iron Ore Pellet Plant of Compañía Minera Huasco, Chile

R Imhof[1], M Battersby[1], F Parra[2] and S Sanchez-Pino[3]

ABSTRACT

Pneumatic flotation, as developed by Dr Rainer Imhof, has been applied in commercial beneficiation operations since 1987. Over 85 flotation cells have been installed in more than 30 operations, successfully beneficiating a wide range of minerals. Pneumatic flotation is however still considered as a non-conventional flotation process. Due to its highly selective nature in operation it has generally found its market in difficult applications where conventional flotation equipment has struggled.

Compañía Minera Huasco (CMH) operates an iron ore pellet plant in central Chile. CMH desired to produce a low silica pellet for the export market where the SiO_2 grade should not exceed 1.5 per cent. It is common practice in other countries to float quartz from hematite with relative ease. However, the silicates contained in the magnetite ore of CMH are only present as quartz in small quantities and the major undesirable silicates are difficult to float.

CMH spent considerable time on developing a reverse flotation process and a reagent suite to try and reduce the silica content to acceptable levels. However, extensive laboratory and pilot plant tests with conventional mechanical tank type cells and with column cells failed to produce the required reduction in impurities. A series of tests with pneumatic flotation cells indicated that this type of flotation technology could achieve the required silica target. A 500 tph Imhoflot pneumatic flotation plant was subsequently constructed and successfully commissioned by CMH, making it one of the largest iron ore flotation plants in the world.

This paper details the background and testing that was undertaken by CMH which led them to choose pneumatic flotation as the preferred process and compares the test results with that achieved in the industrial plant.

INTRODUCTION

There are two standard processes to produce crude iron; the traditional blast furnace process using coke to reduce the iron ore concentrate and the newer alternative of reducing the oxides with natural gas. In the newer direct reduction (DR) process, the specification of the sinter, or pellet feed, to the furnace has to fulfil more stringent specifications. These specifications include a minimum of 67 per cent Fe, low Al_2O_3 and the SiO_2 content should not exceed 1.5 per cent by weight. Since new investments are ever increasing in DR plants rather than conventional blast furnaces, the market for high quality DR-pellets is steadily growing. In 2003, about 49.5 million tons of direct reduced iron (DRI) was produced by Midrex plants. This was about two-thirds of the worldwide DRI output.

CMH decided to increase the quality of their iron ore pellets produced by their pellet plant at Huasco, West of Vallenar on the coast of Chile, with the aim of increasing their share of the DR-pellet market. Up to the commissioning of the Imhoflot flotation plant, CMH had only produced DR-Hyl pellets, with nothing suitable for Midrex plant operations. CMH is part of the Compañía Minera Pacifico group of companies which operate three iron ore mines in Chile, namely Algarrobo, Colorado and Romeral. The nature of the iron ore is magnetite and is therefore recovered and enriched using perma-magnetic rolls. It is a common problem that these magnetic rolls not only recover the liberated iron particles but also the middling particles where intergrowths between silicates and magnetite occur. The use of reverse flotation to remove these undesirable middlings and hence enhance the quality of concentrate is already a standard process in other countries.

IMHOFLOT

Pneumatic flotation technology has its origins in work undertaken in the 1970s by Professor Bahr of the University of Clausthal, Germany (Bahr, 1982) and Professor Simonis of the University of Berlin, Germany (Simonis, 1983). The first research work was started in 1973/1974 with the first prototype model being built in 1978. The first real implementation of pneumatic flotation was in the mid-1980s. Dr Imhof has continued the design and development resulting in the Imhoflot pneumatic flotation process and equipment supplied by Maelgwyn Mineral Services of the UK. Pneumatic flotation separates the froth flotation process into its constituent parts of feed conditioning, bubble generation, bubble/particle contact and phase separation of the froth and tailings. By separating out the individual components, each one can be individually optimised for various operations. The V-Cell design of Imhoflot is illustrated in Figure 1. Slurry is pumped with enough fluid energy to produce intensive aspiration of air and rapid dispersion for efficient bubble/particle contact. The aeration unit, or bubble generator, is a fundamental component of the process and is constructed of fused silicon carbide components to protect it from wear. Bubble sizes generated by the aerator have been measured in the range of 10 µm through to 1500 µm, with the statistical average being around 300 µm (Brown, 2001). Figure 2 shows an Imhoflot aerator in assembly. The Imhoflot V-Cell incorporates froth level control and variable cross-sectional area for froth removal, both can be used to control mineral enrichment and mass pull (Imhof, 2000).

FLOTATION EQUIPMENT TECHNOLOGY SCREENING

The Research and Development Centre of CMP located at the Huasco Pellet Plant commenced a testwork program to systematically investigate the feasibility of using reverse flotation as a separation process to reduce the silicate content of the primary magnetic concentrate. The testwork was comprised of laboratory bench scale as well as pilot plant operations. Apart from determining the ability of froth flotation to produce the necessary rejection of silica, the work also investigated the relative performance of various flotation equipment technology, eg conventional tank cells, column cells and pneumatic flotation, the latter already well proven in Chile in a number of copper operations (Fuentes, 1995; Imhof, 1997).

Table 1 shows the results of this technology screening. The primary magnetic concentrate 'dtt' are the results obtained using a Davis Tube at the test facility. The target was to achieve by

1. Maelgwyn Mineral Services Ltd, The Maltings, East Tyndall Street, Cardiff Bay CF24 5EA, UK. Email: mms@maelgwyn.com

2. Compañía Minera del Pacifico SA, Casilla 57, Vallenar, Chile.

3. Ingenieria de Minerales SA, Ave Padre Alberto Hurtado 1423, Antofagasta, Chile.

TABLE 1

Comparison of results for different types of flotation equipment.

Item	Primary magnetic concentrate		Flotation type					
			Pneumatic		Column		Mechanical	
%	H	H dtt	C	C dtt	C	C dtt	C	C dtt
Fe	68.61	69.64	69.18	69.86	68.67	69.61	69.25	69.76
P	0.021	0.019	0.019	0.015	0.027		0.027	
SiO_2	2.31	1.56	1.67	1.30	2.08	1.47	1.84	1.60
CaO	0.30	0.22	0.27	0.19	0.30		0.39	0.22
MgO	0.69	0.56	0.66	0.51	0.75		0.63	0.51
Al_2O_3	0.68	0.63	0.65	0.58	0.74		0.68	0.58
V	0.17	0.15	0.17	0.15	0.15		0.16	0.15
TiO_2	0.15	0.11	0.15	0.12	0.11		0.10	0.10

where:
H = Head assay H dtt = Head assay with Davis Tube C = Concentrate assay C dtt = Concentrate assay with Davis Tube

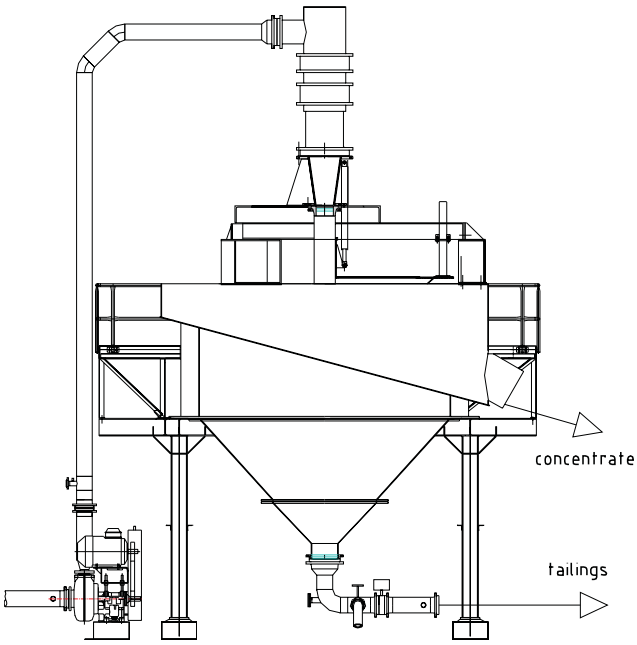

FIG 1 - Imhoflot V-cell design.

FIG 2 - Imhoflot aerator in assembly.

flotation, a lower grade of silicates (SiO_2) than achieved in the feed to the flotation cells by treatment with the Davis Tube. This target was not met during the preliminary testwork. However, the research team recognised that pneumatic flotation achieved the best results.

The relatively disappointing results obtained, especially when compared to operating plant results (for example in Brazil), are based on the mineralogical composition of the gangue material. Table 2 details the mineral compounds of the gangue from the two different CMH deposits of Algarrobo and Colorado. It should be pointed out that quartz, which is normally easy to float, is not the main silicate gangue. The other silicate minerals which occur in majority, especially Actinolite (which has a stalky shape by nature) only float with difficulty.

TABLE 2

Mineral composition of the gangue material in the magnetite concentrate.

Deposit	Algarrobo	Colorado
Mineral	**Weight %**	**Weight %**
Quartz	13.83	7.73
Feldspar	10.66	25.82
Chlorite	5.9	21.57
Actinolite	56.51	21.78†
Seriscite	1.41	21.77
Turmalin	0.75	0.21
Calcite	10.93	1.13
Total	100	100

† Actinolite is a mineral of stalky shape $[Ca_2(Mg, Fe^{+2})_5((OH)_8(AlSi)_4O_{10})]$ that floats with difficulty in comparison to quartz

SECOND STAGE PILOT PLANT TESTWORK

Resulting from the work done in the previous stage, CMH decided to focus further work using pneumatic flotation technology. While the first stage of testwork utilised a small laboratory pneumatic flotation unit, the second stage utilised larger pilot plant equipment. Figure 3 illustrates the pilot plant test equipment setup. The work was done in batch mode with the pulp conditioned prior to introduction into the cell at approximately 250 litres per hour. The aeration unit in this case

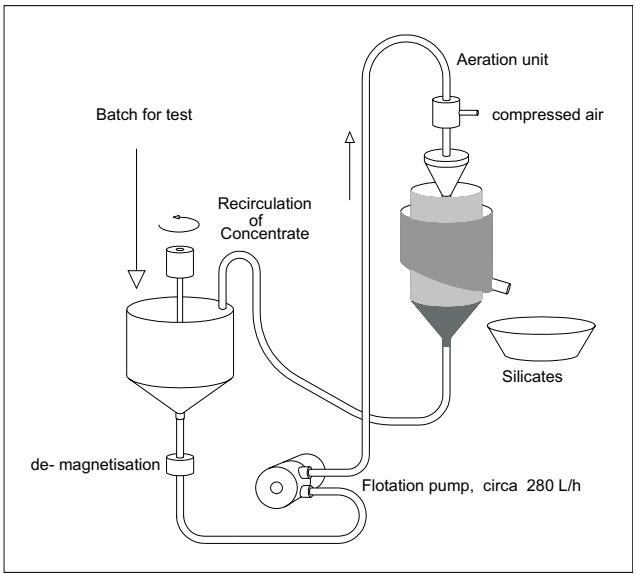

FIG 3 - Test procedure in the laboratory.

was supplied with compressed air whereas full-scale plant aerators are self-aspirating. The variable speed pump fed the aerator with a pressure between 2.2 bar and 2.7 bar, the inlet pressure being one of the variables tested. The aerated pulp entered the separating vessel via a down coming pipe and manifold with small orifices near the bottom. The froth was discharged into a dish and the tailings were recycled to the feed tank. This procedure was a batch test with the flotation process continued as long as froth with minerals could be recovered. Samples for assay were taken from the froth, feed and tailings at the beginning of the run and approximately after every complete cycle. Each complete cycle is based on the time taken for the total sample in the feed tank to have passed through the flotation cell. The grade of iron in the actual feed and corresponding iron concentrate (tailings of the flotation cell) was plotted against the cumulative time of the flotation process. Both curves meet when the flotation process is completely finished and there is no more mineralisation in the froth. A step diagram was used (Imhof, 1993) between the two curves to predict the number of cells required in series to achieve a certain Fe quality in the concentrate. In the example given in Figure 4 the feed to the cells starts with 63 per cent Fe (the starting point of the lower curve). The concentrate produced in this first cell corresponds to some 66.3 per cent Fe, read from the upper curve. A second cell would therefore be fed with this quality of feed material. Moving horizontally the feed curve is met again and going vertically to the sinks discharge curve the Fe quality can be determined. The laboratory tests determined that three cells were required to produce a concentrate quality of some 70 per cent Fe.

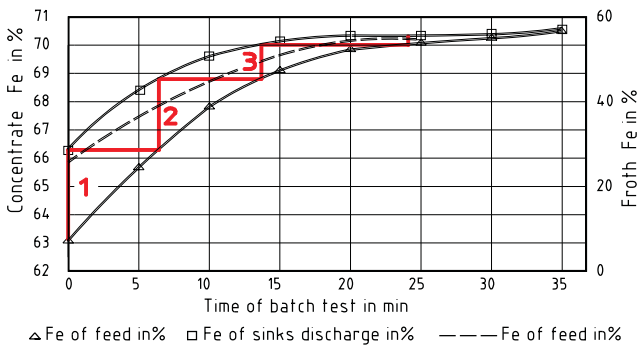

FIG 4 - Batch test with recycling of Fe-concentrate.

THIRD STAGE PILOT PLANT TESTWORK

CMH wished to confirm the results obtained in the batch tests by running a three stage pilot plant. A picture of the pilot plant in operation can be seen in Figure 5.

FIG 5 - CMH Imhoflot laboratory pilot plant.

Table 3 illustrates the chemical composition and the particle size distribution of the feed material that was used for further systematic investigations using the three stage pilot plant. The SiO_2 composition of the feed, at 1.87 per cent, was lower than expected. The Davis Tube tests demonstrated that theoretically the SiO_2 levels could be reduced to 1.32 per cent. This would improve the Fe content from 69.24 per cent to 70.28 per cent. However, as mentioned previously, this is not practically possible with magnetic roll separation.

Tables 4 and 5 give the results of a two test series performed with nine batches each but with two different sample qualities. The parameters that were varied were the dosages of the three

TABLE 3

Chemical and size analysis of the test material.

Chemical description			Granulumetric description		
Item	**H**	**C dtt**	**Mesh**	**Micron**	**% Passing accumulative**
% Fe	69.24	70.28	# 100	150	99.59
% SiO_2	1.87	1.32	# 150	100	98.56
% CaO	0.31	0.19	# 200	75	96.10
% MgO	0.73	0.49	# 270	53	84.19
% Al_2O_3	0.52	0.42	# 325	45	75.56

TABLE 4

Results of the second test series.

Sample	Test parameters			Quality of final product			
	Depressant	Collector	Frother	Fe	SiO_2	Yield	Recovery
	g/t	g/t	g/t	%	%	%	%
1	200	180	100	70.75	0.76	73.78	75.33
2	200	120	50	70.53	0.86	90.48	92.10
3	0	180	100	70.60	0.82	68.78	70.08
4	0	120	50	70.75	0.80	78.44	80.09
5	100	150	75	70.60	0.82	78.73	80.22
6	0	180	50	70.75	0.86	66.11	67.50
7	0	120	100	70.60	0.86	83.10	84.67
8	200	180	50	70.90	0.80	81.50	83.39
9	200	120	100	70.75	0.90	90.61	92.52

Collector: Lilaflot D 817 M
Depressant: Dextrin Amidex 182
Frother: MIBC

TABLE 5

Results of the third test series.

Sample	Test parameters			Quality of final product			
	Depressant	Collector	Frother	Fe	SiO_2	Yield	Recovery
	g/t	g/t	g/t	%	%	%	%
1	100	80	30	69.71	1.52	98.25	98.85
2	100	80	50	69.78	1.40	97.38	98.07
3	200	80	30	69.49	1.55	97.97	98.25
4	200	80	50	70.00	1.32	96.90	97.89
5	100	120	30	69.98	1.36	94.53	95.47
6	100	120	50	70.81	1.01	86.96	88.87
7	200	120	30	70.13	1.28	95.19	96.34
8	200	120	50	70.51	0.93	92.54	94.17
9	150	100	40	70.28	1.21	94.61	95.96

Collector: Lilaflot D 817 M
Depressant: Dextrin Amidex 182
Frother: MIBC

different reagents – collector, depressant and frother. The collector Lilaflot D 817M proved to be most effective in regard to selectivity between magnetite and silicates. The losses of magnetite in the froth were acceptable.

Figure 6 presents a complete balance calculated from the pilot testing using the three pilot cells connected in series. The primary magnetic concentrate started with 1.63 per cent SiO_2 (69.69 per cent Fe). The Davis Tube test showed 1.015 per cent SiO_2 (70.05 per cent Fe). After three stages of flotation, the SiO_2 content was reduced to 0.9 per cent, with the Fe concentrate increased to 70.4 per cent and an iron recovery of 94.22 per cent. After finishing and thickening, the final concentrate reported at 0.77 per cent SiO_2 and 70.7 per cent Fe. The grade of the froth (tailings product) showed an SiO_2 grade of 12.1 per cent and 58.11 per cent Fe, whereas the Davis Tube value of this material was 9.06 per cent SiO_2. This demonstrates that the material was mostly intergrown because a high amount of silica was pulled from the magnets of the Davis Tube. For maximum Fe recovery the tailings froth should be reground for further liberation.

PLANT LAYOUT

The results obtained from the three stage pilot plant in the feasibility study convinced CMP it was worthwhile investing in a pneumatic flotation plant. The froth flotation plant was designed to treat 500 dry tons per hour of primary concentrate at their pellet plant at Huasco. In the plant layout, two parallel lines comprising of three cells each were designed to process 1000 m^3 per hour of primary magnetite slurry. See Figure 7 for the process flow diagram of the plant. After subsequent conditioning with starch and collector in two separate agitation tanks, the slurry is pumped by two Warman 12/10-AH pumps to the first Imhoflot (IMF-V45) flotation cell which has a net diameter of 4.5 m. A part of the sinks (concentrate) of the first cell is recycled by a small separate pump into the suction line of the main flotation pump. The idea is to give this portion of slurry a second chance to be treated in the same cell for additional silica removal. The amount of recycling can be adjusted with the variable speed drive pump. The froth containing the silicates is discharged into the concentrical froth launder. The sinks are fed

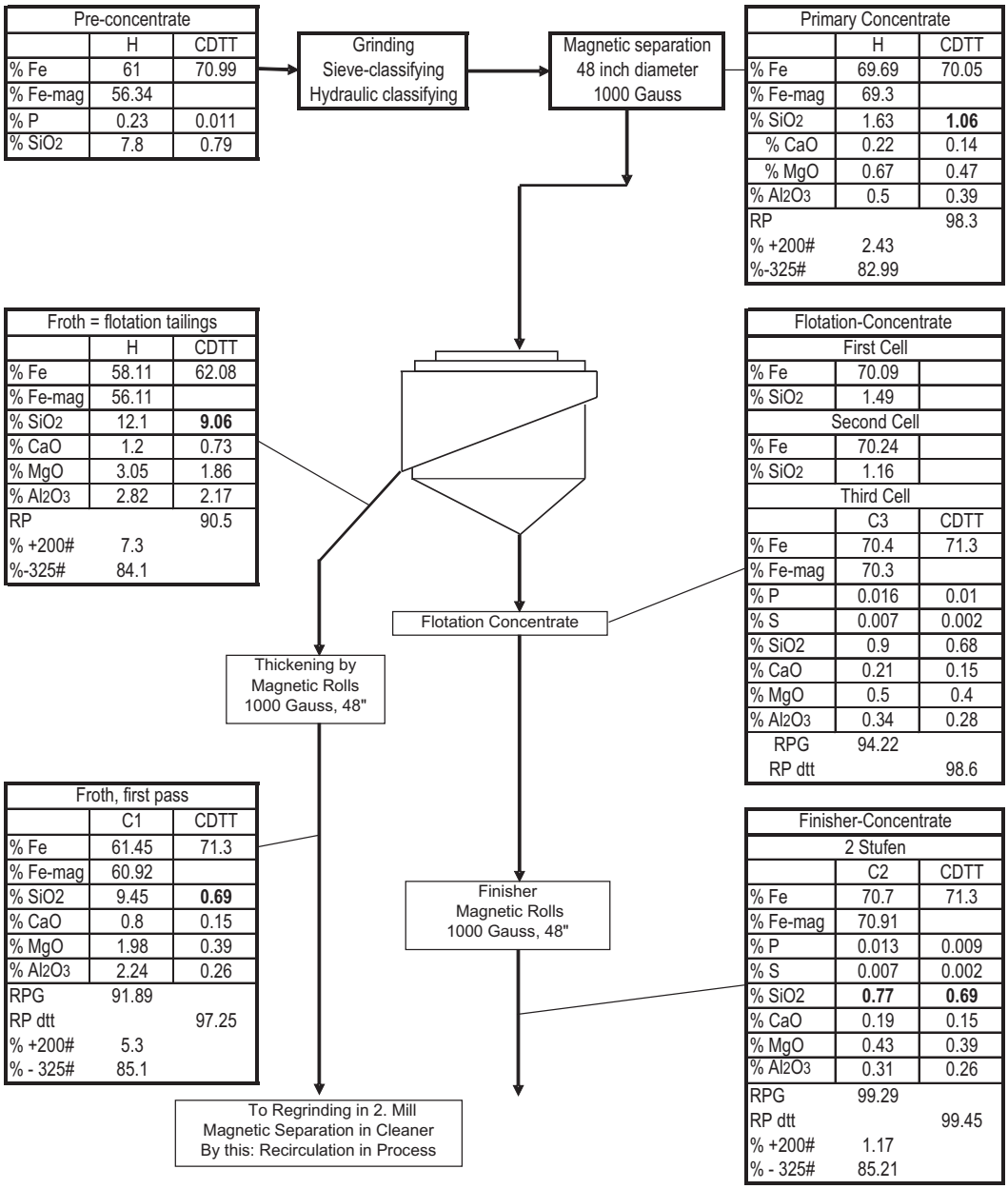

FIG 6 - Mass balance of pilot plant testwork.

to the feed pump of the second cell. This pump controls the level of the first cell via a variable speed drive system. The philosophy of feeding directly into the next flotation cell without using a tank in-between has two advantages. Firstly it saves energy since the pump is fed with the geodetic head of the previous cell, and secondly it avoids the need for level control of such an intermediate tank.

The sizing of the three cells in one line corresponds to approximately eight minutes of total slurry retention time. Due to the shape of the flotation cell it is not necessary to drain the tanks during any standstill. The plant can be restarted after long shutdowns without any problems because the sediments are dispersed and re-suspended using automatic operating flush valves prior to starting the pumps. The flotation line is fully automated and operated using a PLC. A flow metre and nuclear density metre determine the mass flow of magnetite and controls the reagent dosage. Figure 8 shows the constructed plant.

OPERATIONS

The Huasco pneumatic flotation plant was commissioned at the end of 2002. The results were good from the very beginning of plant operation. They matched the results obtained by the pilot plant with respect to throughput, grade and recovery and were above those given in the performance guarantee by the manufacturer. The operations have to date been without major problems. The automatic system for resuspending the solids has worked well, even after many hours of shut down and with slurry densities of greater than 50 per cent solids by weight. An area of concern for CMH was the wear rate on the working parts of the aerator, but the original aerators have however shown no appreciable wear after 18 months of operation.

The success of the Huasco flotation plant and the ever increasing demand for low silica export pellets convinced CMP to build a similar Imhoflot flotation plant for the Romeral deposit

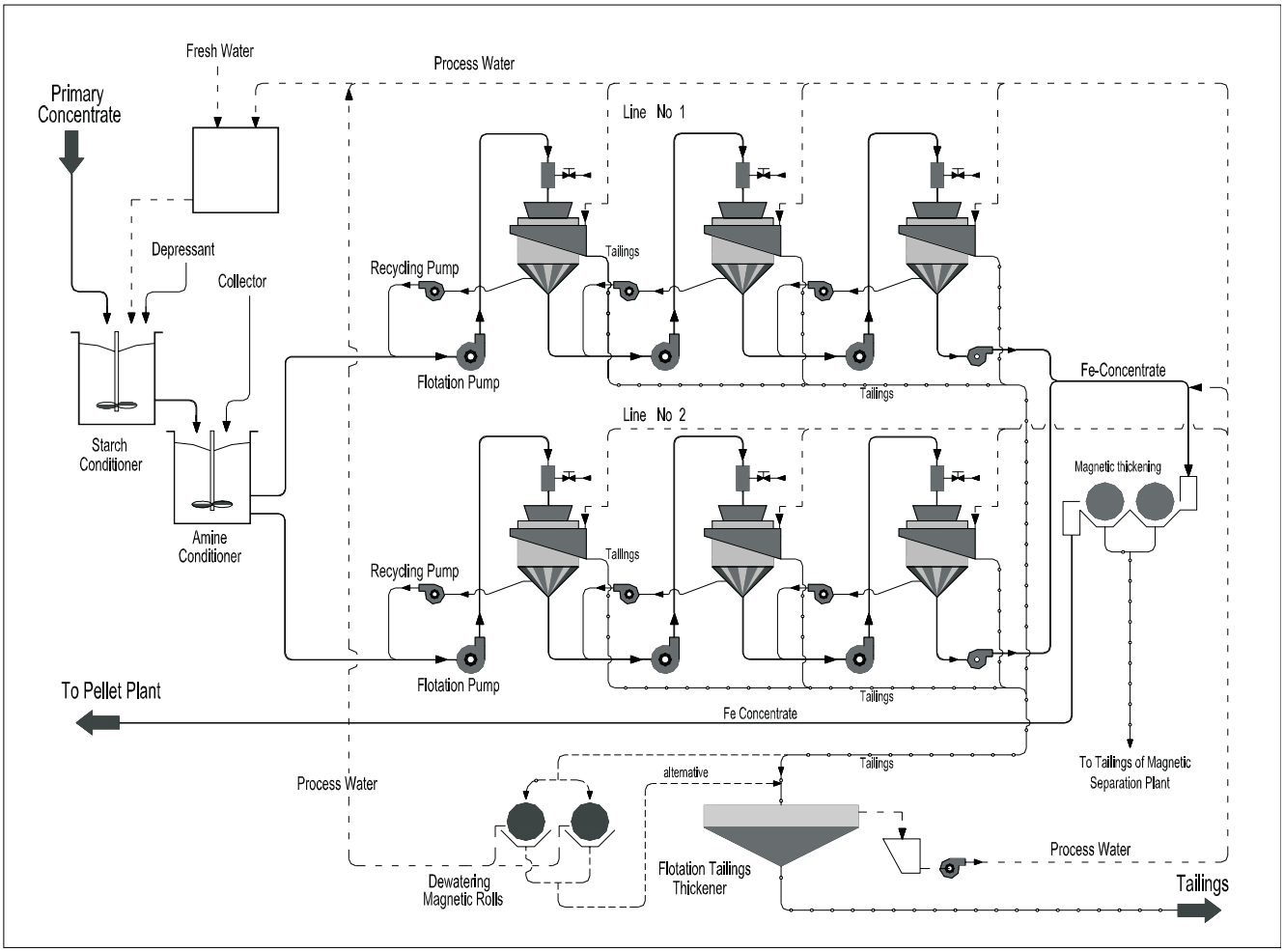

FIG 7 - CMH process flow diagram.

FIG 8 - The Imhoflot flotation plant at Huasco.

near La Serena. This plant is designed to treat approximately 310 dry tons per hour and will have only one line consisting of two, 5.2 m diameter Imhoflot V-Cells in series. The volumetric flows will be 960 m^3 per hour, including the recycle. Commissioning of the Romeral plant has been planned for the early part of 2005.

CONCLUSIONS

Compañía Minera Huasco's main objective when setting out to build a flotation plant for the treatment of their primary magnetic concentrate was to reduce the SiO_2 content. The SiO_2 content had to be reduced to below 1.5 per cent before DR quality pellets could be produced. The testwork performed by CMH confirmed that Imhoflot pneumatic flotation technology was able to best provide the results required.

The full-scale industrial plant has been operational for over 18 months and has shown no appreciable wear of critical parts. The results of the pilot plant work have been confirmed and have in most cases surpassed the manufacturers' performance guarantees. The success of the Huasco plant has prompted CMH to build another pneumatic flotation plant for the Romeral deposit and is due for commissioning in 2005.

REFERENCES

Bahr, A, Luedtke, H and Mehrhoff, F, 1982. The development and introduction of a new coal flotation cell, in *Proceedings XV International Mineral Processing Congress*, Toronto, Canada, 17 - 23 October.

Brown, J, Imhof, R and Lotzien, R, 2001. Self-aspirating aeration reactors for pneumatic flotation and other applications, in *Proceedings Ninth Balkan Mineral Processing Congress*, Istanbul, Turkey, 11 - 13 September.

Fuentes, B G and Espoz, A H, 1995. Incorporación de nuevas tecnologías de flotacion en la planta concentradora de Minera Michilla S A, in *Proyecto de Innovación technologica, Corfo,* Antofagasta, Chile.

Imhof, R M and Brown, J V, 2000. Imhoflot – Evolution of pneumatic flotation, in *Proceedings Major Trends in Development of Sulfide Ores Up-Grading in the 21st Century Conference*, Norilsk, Russia, 24 - 28 April.

Imhof, R M, Lotzien, R and Sobek, S, 1993. Pneumatic flotation: A reliable procedure for a correct plant layout, in *Proceedings XVIII International Mineral Processing Congress*, Sydney, 23 - 28 May, pp 971-978.

Imhof, R M, Sanchez, S P, Fuentes, G B, Latorre, G J, Conejeros, V T, and Carcamo, H G, 1997. Aplicacion de la flotacion neumatica en Chile, *Mineria Chilena*, 16(189):97-103.

Simonis, W, *et al*, 15 October 1981 – 5 May 1983. Verfahren und Flotationszelle zur Flotation von Kohle und Erz, German Patent DE3140966 A1.